Work Order ID 67267

Monday, March 14, 2011 1:28:40 PM

Item ID: D3940-1 **Accept** **Setup Start** **Stop**

Revision ID:

Item Name: Floor Protector (407)

Start Date: 3/14/2011 **Start Qty:** 2.00 **Cust Item ID:**

Required Date: 3/21/2011 **Req'd Qty:** 2.00 **Customer:**

Reference:

Approvals: **Process Plan:** M **Date:** 1-03-14 **Tooling:** _____ **Date:** _____ **Run Start** **Stop**

QC: _____ **Date:** _____ **SPC (Y/N):** _____ **Date:** _____

Sequence ID/ Work Center ID	Operation Description	Set Up/ Run Hours	Tool ID	Tool #	Plan Code	Accept Qty	Reject Qty	Reject Number	Insp. Stamp
Draw Nbr	**Revision Nbr**								
100		0.00							
HandThermo	**Memo**	0.00				x2			Dh 4/03/15
Hand Finishing Thermoforming	1-Cut Sheet to required Blank size								
105		0.00							
HandThermo	Dry Material					x2			Dh 11/03/15
Hand Finishing Thermoforming	**Memo**	0.00							

Dry Sheet as per QSI022 POLYCARBONATE

Temp: 740° F

Time IN: 4:00 pm 11/03/14

Time OUT: 7:00 am 11/03/15

Dart Aerospace Ltd

W/O:		WORK ORDER CHANGES					
DATE	STEP	PROCEDURE CHANGE	By	Date	Qty	Approval Chief Eng / Prod Mgr	Approval QC Inspector

Part No: _____ **PAR #:** _____ **Fault Category:** _____ **NCR:** Yes No **DQA:** _____ **Date:** _____

Resolution: _____ **Disposition:** _____ **QA: N/C Closed:** _____ **Date:** _____

NCR:		WORK ORDER NON-CONFORMANCE (NCR)						
DATE	STEP	Description of NC Section A	Corrective Action Section B			Verification Section C	Approval Chief Eng	Approval QC Inspector
			Initial Chief Eng	Action Description Chief Eng	Sign & Date			

NOTE: Date & initial all entries

H:\fFORMS\Quality Assurance\approved QA\NCRWO RevE

Work Order ID 67267

Monday, March 14, 2011 1:28:40 PM

Item ID: D3940-1
Revision ID:
Item Name: Floor Protector (407)

Accept

Setup Start
Stop

Start Date: 3/14/2011 **Start Qty:** 2.00
Required Date: 3/21/2011 **Req'd Qty:** 2.00
Reference:

Cust Item ID:
Customer:

Run Start
Stop

Approvals: **Process Plan:** _____ **Date:** _____ **Tooling:** _____ **Date:** _____
QC: _____ **Date:** _____ **SPC (Y/N):** _____ **Date:** _____

Sequence ID/ Work Center ID	Operation Description	Set Up/ Run Hours	Tool ID	Tool #	Plan Code	Accept Qty	Reject Qty	Reject Number	Insp. Stamp
110		0.00							
Thermoform	**Memo**	0.00				x2			Dh 11/03/15
Thermoforming Machine	1-Machine Set-Up 2-Pre-heat Tool to required temp. 3-Thermoform as per Dwg and Folio #FTA042 using tool DT9502 Dwg Rev: A. Folio Rev: B.								
120	QC2- Inspect parts off machine FAI/FAIB	0.00							
QC	**Memo**	0.00				x2.			Dh 11/03/15
Quality Control	Visuallly inspect part for proper formation and texture								
130	QC8- Inspect parts - second check	0.00							
QC	**Memo**	0.00				x2			B 11/03/15
Quality Control									

Dart Aerospace Ltd

W/O:		WORK ORDER CHANGES					
DATE	STEP	PROCEDURE CHANGE	By	Date	Qty	Approval Chief Eng / Prod Mgr	Approval QC Inspector

Part No: _____ **PAR #:** _____ **Fault Category:** _____ **NCR:** Yes No **DQA:** _____ **Date:** _____

Resolution: _____ **Disposition:** _____ **QA: N/C Closed:** _____ **Date:** _____

NCR:		WORK ORDER NON-CONFORMANCE (NCR)						
DATE	STEP	Description of NC Section A	Corrective Action Section B			Verification Section C	Approval Chief Eng	Approval QC Inspector
			Initial Chief Eng	Action Description Chief Eng	Sign & Date			

NOTE: Date & initial all entries

H:\fFORMS\Quality Assurance\approved QA\NCRWO RevE

Work Order ID 67267

Monday, March 14, 2011 1:28:40 PM

Item ID: D3940-1 **Accept** **Setup Start** **Stop**

Revision ID:

Item Name: Floor Protector (407)

Start Date: 3/14/2011 **Start Qty:** 2.00 **Cust Item ID:**

Required Date: 3/21/2011 **Req'd Qty:** 2.00 **Customer:**

Reference:

Run Start **Stop**

Approvals: **Process Plan:** _____ **Date:** _____ **Tooling:** _____ **Date:** _____

QC: _____ **Date:** _____ **SPC (Y/N):** _____ **Date:** _____

Sequence ID/ Work Center ID	Operation Description	Set Up/ Run Hours	Tool ID	Tool #	Plan Code	Accept Qty	Reject Qty	Reject Number	Insp. Stamp
140		0.00							
HandThermo	**Memo**	0.00				x2			DL 11/03/15
Hand Finishing Thermoforming	1-Trim to finished dimensions as per Dwg								
150	QC2- Inspect parts off machine FAI/FAIB	0.00							
QC	**Memo**	0.00				x2			DL 11/03/15
Quality Control	Complete FAI document								
160	QC5- Inspect part completeness to step on W/O	0.00							
QC	**Memo**	0.00				(+2)			
Quality Control									

11/03/22

Dart Aerospace Ltd

W/O:		WORK ORDER CHANGES					
DATE	STEP	PROCEDURE CHANGE	By	Date	Qty	Approval Chief Eng / Prod Mgr	Approval QC Inspector

Part No: _____ **PAR #:** _____ **Fault Category:** _____ **NCR:** Yes No **DQA:** _____ **Date:** _____

Resolution: _____ **Disposition:** _____ **QA: N/C Closed:** _____ **Date:** _____

NCR:		WORK ORDER NON-CONFORMANCE (NCR)						
DATE	STEP	Description of NC Section A	Corrective Action Section B			Verification Section C	Approval Chief Eng	Approval QC Inspector
			Initial Chief Eng	Action Description Chief Eng	Sign & Date			

NOTE: Date & initial all entries

H:\fFORMS\Quality Assurance\approved QA\NCRWO RevE

Work Order ID 67267

Monday, March 14, 2011 1:28:40 PM

Item ID: D3940-1 **Accept** **Setup Start**

Revision ID: **Stop**

Item Name: Floor Protector (407)

Start Date: 3/14/2011 **Start Qty:** 2.00 **Cust Item ID:**

Required Date: 3/21/2011 **Req'd Qty:** 2.00 **Customer:**

Reference:

Run Start

Approvals: **Process Plan:** _____ **Date:** _____ **Tooling:** _____ **Date:** _____

Stop

QC: _____ **Date:** _____ **SPC (Y/N):** _____ **Date:** _____

Sequence ID/ Work Center ID	Operation Description	Set Up/ Run Hours	Tool ID	Tool #	Plan Code	Accept Qty	Reject Qty	Reject Number	Insp. Stamp
170	Identify as per dwg & Stock Location:_____	0.00							
Packaging	Memo PIP 67266	0.00					11/3/23		2
Packaging									
180	QC21- Final Inspection - Work Order Release	0.00					11/3/23		
QC	Memo	0.00							
Quality Control									

MLF
11-03-24

Dart Aerospace Ltd

W/O:		WORK ORDER CHANGES					
DATE	STEP	PROCEDURE CHANGE	By	Date	Qty	Approval Chief Eng / Prod Mgr	Approval QC Inspector

Part No: _____ **PAR #:** _____ **Fault Category:** _____ **NCR:** Yes No **DQA:** _____ **Date:** _____

Resolution: _____ **Disposition:** _____ **QA: N/C Closed:** _____ **Date:** _____

NCR:		WORK ORDER NON-CONFORMANCE (NCR)						
DATE	STEP	Description of NC Section A	Corrective Action Section B			Verification Section C	Approval Chief Eng	Approval QC Inspector
			Initial Chief Eng	Action Description Chief Eng	Sign & Date			

NOTE: Date & initial all entries

Picklist Print

Monday, March 14, 2011 1:28:52 PM

Work Order ID: 67267

Parent Item: D3940-1

Parent Item Name: Floor Protector (407)

Start Date: 3/14/2011 **Required Date:** 3/21/2011

Start Qty: 2.00 **Required Qty:** 2.00

Comments: IPP Rev. A New Issue 09/02/06 DL
Add Step 105 Dry Material 10/04/21 DL
IPP Rev B

Component Item ID/ Item Name	Replacement Item ID	Mfg/ Purch	Bin Item	Primary Location	Last Location	Route Seq ID	Unit of Measure	Qty on Hand	Qty per Kit	Total Qty	Qty Issued	Date Issued	Status
MLEXS.118-90318-08 Lexan Sheet		Purchased	No			100	sf	2,428.370	9.03	18.06			

Location	Loc Qty	Loc Code
therm	2428.37	
113127	2428.37	

DL 11/03/21

18.06 sq. ft

Dart Aerospace Ltd

W/O:		WORK ORDER CHANGES					
DATE	STEP	PROCEDURE CHANGE	By	Date	Qty	Approval Chief Eng / Prod Mgr	Approval QC Inspector

Part No: _____ **PAR #:** _____ **Fault Category:** _____ **NCR:** Yes No **DQA:** _____ **Date:** _____

Resolution: _____ **Disposition:** _____ **QA: N/C Closed:** _____ **Date:** _____

NCR:		WORK ORDER NON-CONFORMANCE (NCR)						
DATE	STEP	Description of NC Section A	Corrective Action Section B			Verification Section C	Approval Chief Eng	Approval QC Inspector
			Initial Chief Eng	Action Description Chief Eng	Sign & Date			

NOTE: Date & initial all entries

H:\FORMS\Quality Assurance\approved QA\NCRWO RevE

DART AEROSPACE LTD	Work Order:	67767
Description: Floor Protector	Part Number:	D3940-1
Inspection Dwg: D3940 **Rev:** A		Page 1 of 1

FIRST ARTICLE INSPECTION CHECKLIST

[X] First Article [ ] Prototype

THERMOFORMING SECTION

Description	Accept	Reject	Method of Inspection	Comments
Inside Radii less than N/A "	—			
Shape Definition	✓			
Texture Retention	✓			
Material imperfections such as bumps, cracks, voids, scratching	✓			

Measured by:	DL	Date:	11/03/15

TRIMMING SECTION

Drawing Dimension	Tolerance	Actual Dimension	Accept	Reject	Method of Inspection	Comments
45.8	REF	46"	✓		TAPE DL-01	
20.8	REF	20.875	✓		TAPE DL-01	
0.50	Min	0.645"	✓		Vern DL-02	
0.62	Min	0.69"	✓		Vern DL-02	
0.38	Min	0.47"	✓		Vern DL-02	
0.080	Min	0.084"	✓		ULTRA	
0.050	Min	0.057"	✓		ULTRA	

Measured by:	DL	Date:	11/03/15
Audited by:	[illegible]	Date:	11/03/15
Prototype Approval:	N/A	Date:	N/A

Rev	Date	Change	Revised by	Approved
A	09.09.17	New Issue	KJ	[illegible]

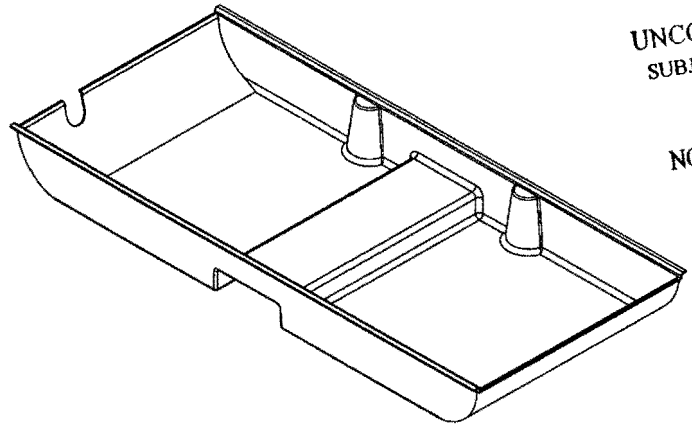

SHOP COPY
RETURN TO
ENGINEERING
UNCONTROLLED COPY
SUBJECT TO AMENDMENT
WITHOUT NOTICE
WORK ORDER
NO. 67267
PH 11-03-14

D3940-1 FLOOR PROTECTOR (407)

RELEASED 09/04/08

NOTES:
1) MATERIAL: LEXAN 90318 (PROTECT-A-GLAZE), 0.118 THICK, 112-CLEAR (MLEXS.118-90318-08)
2) FINISH: NONE
3) TOLERANCES: PER DART QSI 018 UNLESS OTHERWISE NOTED
4) UNITS: INCHES UNLESS OTHERWISE NOTED
5) BREAK SHARP EDGES: 0.005 TO 0.010 MAX
6) IDENTIFICATION: IDENTIFY WITH DART P/N "D3940-1" USING VIBRATING STYLUS
7) WEIGHT: 4.5 lbs
8) TOOLING: THERMOFORM PER MOLD DT9502 PER DART QSI 022. TRIM PER MOLD
9) MINIMUM THICKNESS: 0.050" EXCEPT AS SHOWN

REV.	DESCRIPTION	BY	DATE
A	NEW ISSUE	PH	09.04.01

DESIGN	PH	DART AEROSPACE LTD HAWKESBURY, ONTARIO, CANADA	
DRAWN	PH		
CHECKED		DRAWING NO. D3940	REV. A SHEET 1 OF 2
MFG. APPR.			
APPROVED		TITLE FLOOR PROTECTOR (407)	SCALE NTS
DE APPR.			
DATE	09.04.01		

COPYRIGHT © 2009 BY DART AEROSPACE LTD
THIS DOCUMENT IS PRIVATE AND CONFIDENTIAL AND IS SUPPLIED ON THE EXPRESS CONDITION THAT IT IS NOT TO BE USED FOR ANY PURPOSE OR COPIED OR COMMUNICATED TO ANY OTHER PERSON WITHOUT WRITTEN PERMISSION FROM DART AEROSPACE LTD

Dart Aerospace Ltd

W/O:		WORK ORDER CHANGES					
DATE	STEP	PROCEDURE CHANGE	By	Date	Qty	Approval Chief Eng / Prod Mgr	Approval QC Inspector

Part No: _____ **PAR #:** _____ **Fault Category:** _____ **NCR:** Yes No **DQA:** _____ **Date:** _____

Resolution: _____ **Disposition:** _____ **QA: N/C Closed:** _____ **Date:** _____

NCR:		WORK ORDER NON-CONFORMANCE (NCR)						
DATE	STEP	Description of NC Section A	Corrective Action Section B			Verification Section C	Approval Chief Eng	Approval QC Inspector
			Initial Chief Eng	Action Description Chief Eng	Sign & Date			

NOTE: Date & initial all entries

H:\fFORMS\Quality Assurance\approved QA\NCRWO RevE

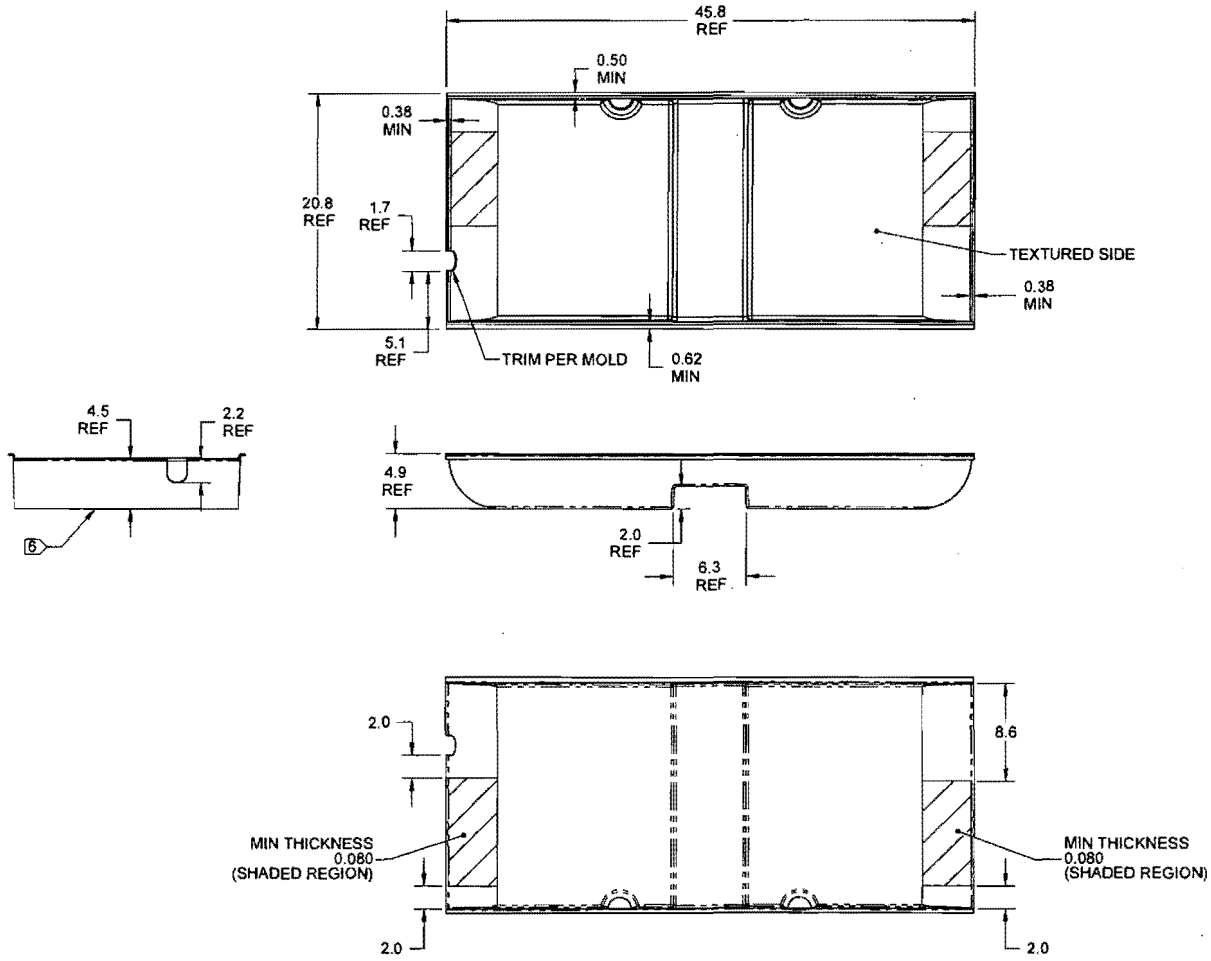

w/o 62247

RELEASED
Oct 06/08

D3940-1 FLOOR PROTECTOR (407)

DESIGN	PH	**DART AEROSPACE LTD** HAWKESBURY, ONTARIO, CANADA
DRAWN	PH	
CHECKED		DRAWING NO. D3940 — REV. A — SHEET 2 OF 2
MFG. APPR.		
APPROVED		TITLE: FLOOR PROTECTOR (407) — SCALE: NTS
DE APPR.		
DATE	09.04.01	

COPYRIGHT © 2009 BY DART AEROSPACE LTD
THIS DOCUMENT IS PRIVATE AND CONFIDENTIAL AND IS SUPPLIED ON THE EXPRESS CONDITION THAT IT IS NOT TO BE USED FOR ANY PURPOSE OR COPIED OR COMMUNICATED TO ANY OTHER PERSON WITHOUT WRITTEN PERMISSION FROM DART AEROSPACE LTD.

Dart Aerospace Ltd

W/O:		WORK ORDER CHANGES					
DATE	STEP	PROCEDURE CHANGE	By	Date	Qty	Approval Chief Eng / Prod Mgr	Approval QC Inspector

Part No: _____ **PAR #:** _____ **Fault Category:** _____ **NCR:** Yes No **DQA:** _____ **Date:** _____

Resolution: _____ **Disposition:** _____ **QA: N/C Closed:** _____ **Date:** _____

NCR:		WORK ORDER NON-CONFORMANCE (NCR)						
DATE	STEP	Description of NC Section A	Corrective Action Section B			Verification Section C	Approval Chief Eng	Approval QC Inspector
			Initial Chief Eng	Action Description Chief Eng	Sign & Date			

NOTE: Date & initial all entries